Glanford Avenue @ Baker Street

Thursday, October 17, 2019

The data presented here is for information purposes only and should not be considered authoritative for construction, geotechnical, engineering, navigational, legal, or other site-specific uses. The information shared is owned by the Transportation Division of the Engineering Department at the District of Saanich. Accuracy is not guaranteed.

Vehicle Turning Movement Survey
With Classification

Major Route: Glanford Avenue
Minor Route: Baker Street
Municipality: Saanich
Filename: Glanford Ave @ Baker St-Oct 17, 2019.xlsx
Location #: TIN001235
Count ID: 2019034
Date: October 17, 2019
Day-of-week: Thursday

East/West Route: Baker Street
Intersection Type: 4-leg
Signalized?: No
Weather: Rain and wet

Vehicle Classifications: Vehicles and Peds
Bikes

This data is for Vehicles and Peds

Shift	Start	End	Duration
AM	7:30	9:30	2.00
MD			
PM	15:30	18:30	3.00
Total	**7:30**	**18:30**	**5.00**

Notes: 24-hour clock used for reporting (15-minute increments)
North Approach - southbound vehicles approaching intersection from the north
15x4 - 15 min volume (from maximum 15 minute period of movement/approach in peak hour period [*]) x 4
Pedestrians - N indicates pedestrians crossing north approach (east/west)

Comments:

Survey Data
Vehicles and Peds

Glanford Avenue @ Baker Street
Thursday, October 17, 2019

Time	Glanford Ave				Glanford Ave				Baker St				Baker St										
Period	NORTH Approach				SOUTH Approach				WEST Approach				EAST Approach				Total Volume		Peak	Crosswalks			
Begins	Left	Thru	Right	Total	Left	Thru	Right	Total	Left	Thru	Right	Total	Left	Thru	Right	Total	15-min	Hour		N	S	W	E
7:30	0	48	3	**51**	2	67	2	**71**	5	0	3	**8**	12	1	3	**16**	**146**			0	0	1	0
7:45	1	53	2	**56**	3	88	1	**92**	6	0	5	**11**	2	3	4	**9**	**168**		*	1	0	4	5
8:00	3	86	10	**99**	4	90	2	**96**	2	2	5	**9**	6	1	2	**9**	**213**		*	0	0	11	2
8:15	0	115	14	**129**	3	126	1	**130**	5	1	6	**12**	5	1	1	**7**	**278**	805	+	0	0	9	11
8:30	1	107	15	**123**	9	108	3	**120**	2	0	3	**5**	3	3	2	**8**	**256**	915	*	0	1	3	2
8:45	4	58	2	**64**	4	68	3	**75**	5	0	7	**12**	4	0	2	**6**	**157**	904		0	0	0	1
9:00	0	46	5	**51**	1	66	2	**69**	6	0	5	**11**	2	0	0	**2**	**133**	824		0	0	0	2
9:15	0	50	1	**51**	0	46	1	**47**	3	1	1	**5**	4	0	2	**6**	**109**	655		1	0	0	0
n/a																							
n/a																							
n/a																							
n/a																							
n/a																							
n/a																							
n/a																							
n/a																							
n/a																							
n/a																							
n/a																							
n/a																							
Total	9	563	52	**624**	26	659	15	**700**	34	4	35	**73**	38	9	16	**63**	**1460**			2	1	28	23
n/a																							
n/a																							
n/a																							
n/a																							
n/a																							
n/a																							
n/a																							
n/a																							
n/a																							
n/a																							
n/a																							
n/a																							
n/a																							
n/a																							
n/a																							
n/a																							
n/a																							
n/a																							
n/a																							
Total																							
15:30	3	94	8	**105**	4	124	4	**132**	1	0	3	**4**	2	0	3	**5**	**246**		+	1	0	4	4
15:45	1	101	5	**107**	7	107	6	**120**	6	0	2	**8**	5	1	2	**8**	**243**		*	0	0	2	1
16:00	2	88	6	**96**	9	78	2	**89**	1	3	3	**7**	0	0	2	**2**	**194**		*	0	0	2	2
16:15	0	108	11	**119**	11	89	9	**109**	1	2	4	**7**	0	0	5	**5**	**240**	923	*	0	0	2	2
16:30	3	109	8	**120**	1	83	6	**90**	3	1	5	**9**	2	0	5	**7**	**226**	903		0	0	6	2
16:45	4	83	7	**94**	11	95	5	**111**	4	3	2	**9**	5	0	0	**5**	**219**	879		1	2	2	2
17:00	0	95	7	**102**	5	108	7	**120**	2	0	2	**4**	0	0	1	**1**	**227**	912		0	0	3	0
17:15	4	104	13	**121**	7	71	5	**83**	4	1	6	**11**	4	1	4	**9**	**224**	896		0	0	1	1
17:30	3	84	5	**92**	2	95	2	**99**	1	2	6	**9**	2	0	2	**4**	**204**	874		0	0	1	0
17:45	0	72	4	**76**	3	62	4	**69**	1	1	4	**6**	0	1	0	**1**	**152**	807		1	0	1	3
18:00	1	63	7	**71**	5	61	3	**69**	1	0	2	**3**	4	0	0	**4**	**147**	727		0	2	2	2
18:15	0	46	2	**48**	3	55	3	**61**	0	1	2	**3**	2	1	1	**4**	**116**	619		0	0	1	2
n/a																							
n/a																							
n/a																							
n/a																							
n/a																							
n/a																							
n/a																							
n/a																							
Total	21	1047	83	**1151**	68	1028	56	**1152**	25	14	41	**80**	26	4	25	**55**	**2438**			3	4	27	21

AM Peak Period
Vehicles and Peds

Glanford Avenue @ Baker Street
Thursday, October 17, 2019

Time Period Begins	Glanford Ave NORTH Approach				Glanford Ave SOUTH Approach				Baker St WEST Approach				Baker St EAST Approach				Total Volume		Peak	Crosswalks				Conflict	
	Left	Thru	Right	Total	Left	Thru	Right	Total	Left	Thru	Right	Total	Left	Thru	Right	Total	15-min	Hour		N	S	W	E	15 min	Hr
7:30	0	48	3	51	2	67	2	71	5	0	3	8	12	1	3	16	146			0	0	1	0	84	
7:45	1	53	2	56	3	88	1	92	6	0	5	11	2	3	4	9	168		*	1	0	4	5	103	
8:00	3	86	10	99	4	90	2	96	2	2	5	9	6	1	2	9	213		*	0	0	11	2	113	
8:15	0	115	14	129	3	126	1	130	5	1	6	12	5	1	1	7	278	805	+	0	0	9	11	144	444
8:30	1	107	15	123	9	108	3	120	2	0	3	5	3	3	2	8	256	915	*	0	1	3	2	138	498
8:45	4	58	2	64	4	68	3	75	5	0	7	12	4	0	2	6	157	904		0	0	0	1	86	481
9:00	0	46	5	51	1	66	2	69	6	0	5	11	2	0	0	2	133	824		0	0	0	2	75	443
9:15	0	50	1	51	0	46	1	47	3	1	1	5	4	0	2	6	109	655		1	0	0	0	57	356
n/a																									
n/a																									
n/a																									
n/a																									
n/a																									
n/a																									
n/a																									
n/a																									
n/a																									
n/a																									
n/a																									
Total	9	563	52	**624**	26	659	15	**700**	34	4	35	**73**	38	9	16	**63**	1460			2	1	28	23		760
Avg Hr	5	282	26	**312**	13	330	8	**350**	17	2	18	**37**	19	5	8	**32**	730			1	1	14	12		

Peak hour of the intersection

Pk Hr	5	361	41	407	19	412	7	438	15	3	19	37	16	8	9	33	915	*	1	1	27	20	462
15x4	12	460	60	516	36	504	12	520	24	8	24	48	24	12	16	36	1112	+	4	4	44	44	612
PHF	0.42	0.78	0.68	**0.79**	0.53	0.82	0.58	**0.84**	0.63	0.38	0.79	**0.77**	0.67	0.67	0.56	**0.92**	0.82		0.25	0.25	0.61	0.45	0.75

Peak hour of conflicting volumes for the intersection

Pk Hr	5	361	41	407	19	412	7	438	15	3	19	37	16	8	9	33	915	*	1	1	27	20	462
15x4	12	460	60	516	36	504	12	520	24	8	24	48	24	12	16	36	1112	+	4	4	44	44	612
PHF	0.42	0.78	0.68	**0.79**	0.53	0.82	0.58	**0.84**	0.63	0.38	0.79	**0.77**	0.67	0.67	0.56	**0.92**	0.82		0.25	0.25	0.61	0.45	0.75

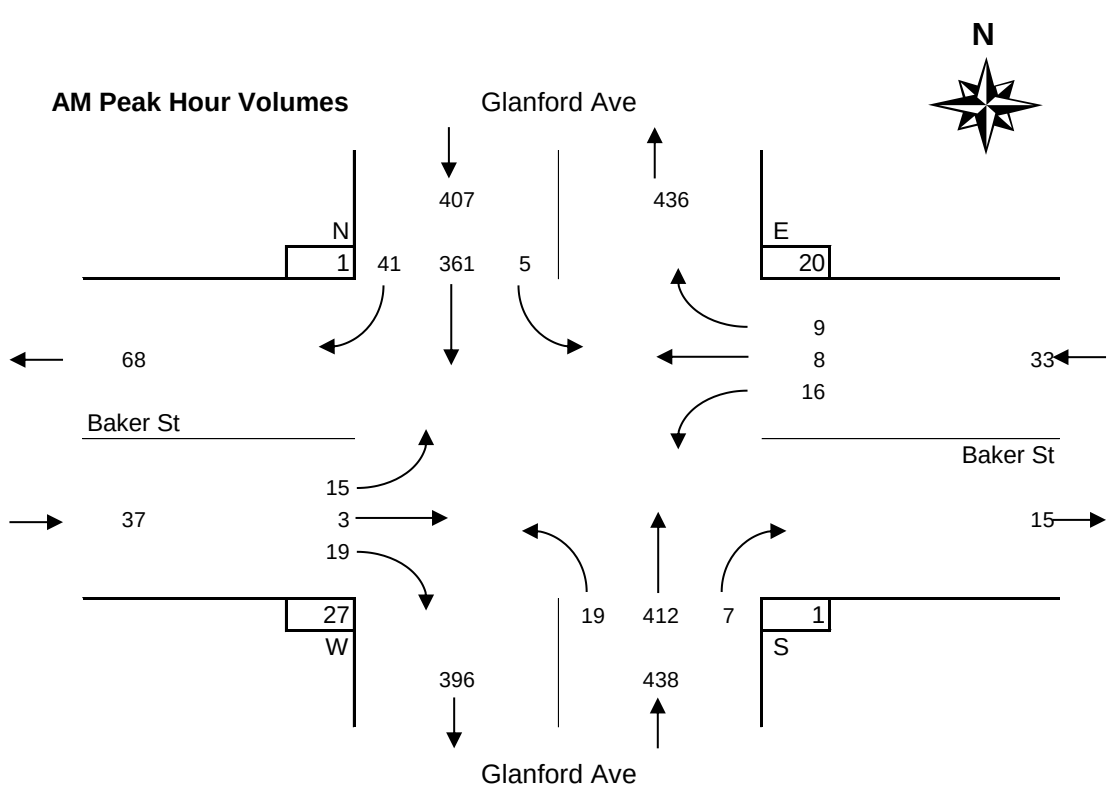

MD Peak Period
Vehicles and Peds

Glanford Avenue @ Baker Street
Thursday, October 17, 2019

Time Period Begins	Glanford Ave NORTH Approach				Glanford Ave SOUTH Approach				Baker St WEST Approach				Baker St EAST Approach				Total Volume		Peak	Crosswalks				Conflict	
	Left	Thru	Right	Total	Left	Thru	Right	Total	Left	Thru	Right	Total	Left	Thru	Right	Total	15-min	Hour		N	S	W	E	15 min	Hr
n/a																									
n/a																									
n/a																									
n/a																									
n/a																									
n/a																									
n/a																									
n/a																									
n/a																									
n/a																									
n/a																									
n/a																									
n/a																									
n/a																									
n/a																									
n/a																									
Total																									
Avg Hr																									

Peak hour of the intersection

Pk Hr																		*							
15x4																		+							
PHF																									

Peak hour of conflicting volumes for the intersection

Pk Hr																		*							
15x4																		+							
PHF																									

MD Peak Hour Volumes

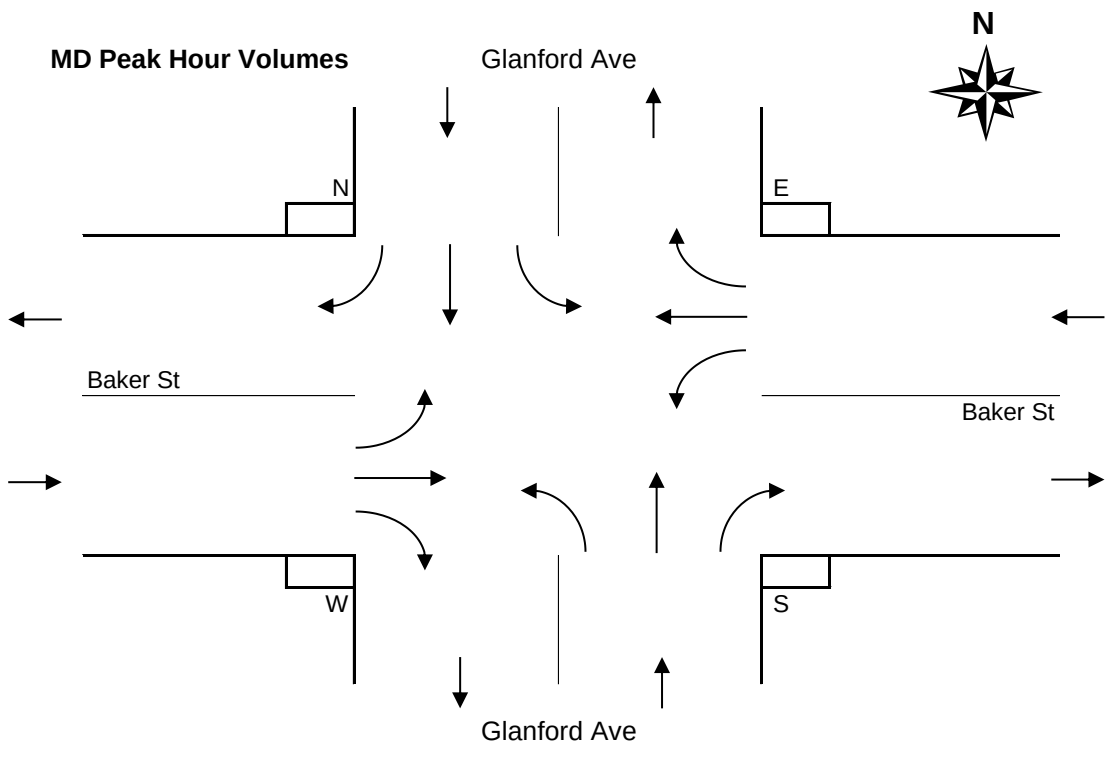

PM Peak Period
Vehicles and Peds

Glanford Avenue @ Baker Street
Thursday, October 17, 2019

Time Period Begins	Glanford Ave NORTH Approach				Glanford Ave SOUTH Approach				Baker St WEST Approach				Baker St EAST Approach				Total Volume		Peak	Crosswalks				Conflict	
	Left	Thru	Right	Total	Left	Thru	Right	Total	Left	Thru	Right	Total	Left	Thru	Right	Total	15-min	Hour		N	S	W	E	15 min	Hr
15:30	3	94	8	105	4	124	4	132	1	0	3	4	2	0	3	5	246		+	1	0	4	4	136	
15:45	1	101	5	107	7	107	6	120	6	0	2	8	5	1	2	8	243		*	0	0	2	1	123	
16:00	2	88	6	96	9	78	2	89	1	3	3	7	0	0	2	2	194		*	0	0	2	2	109	
16:15	0	108	11	119	11	89	9	109	1	2	4	7	0	0	5	5	240	923	*	0	0	2	2	136	504
16:30	3	109	8	120	1	83	6	90	3	1	5	9	2	0	5	7	226	903		0	0	6	2	126	494
16:45	4	83	7	94	11	95	5	111	4	3	2	9	5	0	0	5	219	879		1	2	2	2	114	485
17:00	0	95	7	102	5	108	7	120	2	0	2	4	0	0	1	1	227	912		0	0	3	0	118	494
17:15	4	104	13	121	7	71	5	83	4	1	6	11	4	1	4	9	224	896		0	0	1	1	135	493
17:30	3	84	5	92	2	95	2	99	1	2	6	9	2	0	2	4	204	874		0	0	1	0	110	477
17:45	0	72	4	76	3	62	4	69	1	1	4	6	0	1	0	1	152	807		1	0	1	3	84	447
18:00	1	63	7	71	5	61	3	69	1	0	2	3	4	0	0	4	147	727		0	2	2	2	81	410
18:15	0	46	2	48	3	55	3	61	0	1	2	3	2	1	1	4	116	619		0	0	1	2	63	338
n/a																									
n/a																									
n/a																									
n/a																									
n/a																									
n/a																									
n/a																									
n/a																									
Total	21	1047	83	**1151**	68	1028	56	**1152**	25	14	41	**80**	26	4	25	**55**	2438			3	4	27	21		1279
Avg Hr	7	349	28	**384**	23	343	19	**384**	8	5	14	**27**	9	1	8	**18**	813			1	1	9	7		

Peak hour of the intersection

Pk Hr	6	391	30	427	31	398	21	450	9	5	12	26	7	1	12	20	923	*		1	0	10	9		476
15x4	12	432	44	476	44	496	36	528	24	12	16	32	20	4	20	32	984	+		4	0	16	16		592
PHF	0.50	0.91	0.68	**0.90**	0.70	0.80	0.58	**0.85**	0.38	0.42	0.75	**0.81**	0.35	0.25	0.60	**0.63**	0.94			0.25	n/a	0.63	0.56		0.80

Peak hour of conflicting volumes for the intersection

Pk Hr	6	391	30	427	31	398	21	450	9	5	12	26	7	1	12	20	923	*		1	0	10	9		476
15x4	12	432	44	476	44	496	36	528	24	12	16	32	20	4	20	32	984	+		4	0	16	16		592
PHF	0.50	0.91	0.68	**0.90**	0.70	0.80	0.58	**0.85**	0.38	0.42	0.75	**0.81**	0.35	0.25	0.60	**0.63**	0.94			0.25	n/a	0.63	0.56		0.80

** Calculated peak hour occurs during the first or last hour of shift and therefore may be invalid. **

N

PM Peak Hour Volumes

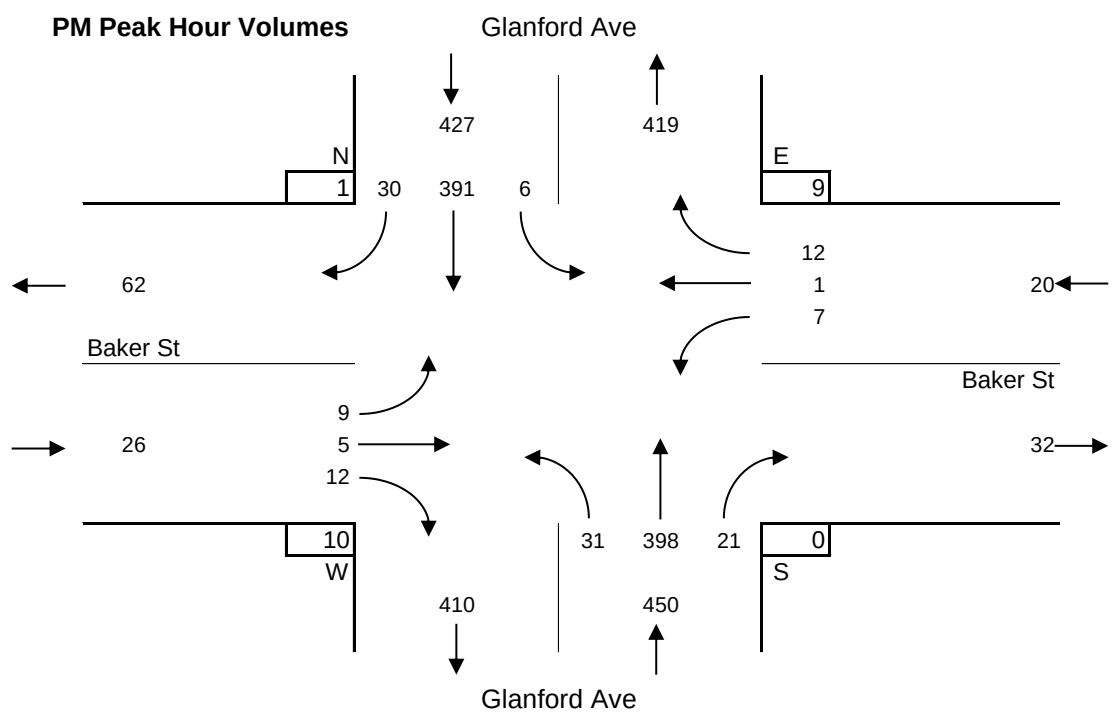

Period Hourly Averages
Vehicles and Peds

Glanford Avenue @ Baker Street
Thursday, October 17, 2019

Entire Survey Period

5 Hours

	Glanford Ave				Glanford Ave				Baker St				Baker St				Total	Crosswalks			
	NORTH Approach				SOUTH Approach				WEST Approach				EAST Approach				Volume				
	Left	Thru	Right	Total	Left	Thru	Right	Total	Left	Thru	Right	Total	Left	Thru	Right	Total		N	S	W	E
Total	30	1610	135	**1775**	94	1687	71	**1852**	59	18	76	**153**	64	13	41	**118**	3898	5	5	55	44
Avg Hr	6	322	27	**355**	19	337	14	**370**	12	4	15	**31**	13	3	8	**24**	780	1	1	11	9

AM Peak Period

2 Hours

	Glanford Ave				Glanford Ave				Baker St				Baker St				Total	Crosswalks			
	NORTH Approach				SOUTH Approach				WEST Approach				EAST Approach				Volume				
Totals	Left	Thru	Right	Total	Left	Thru	Right	Total	Left	Thru	Right	Total	Left	Thru	Right	Total		N	S	W	E
Period	9	563	52	**624**	26	659	15	**700**	34	4	35	**73**	38	9	16	**63**	1460	2	1	28	23
Avg Hr	5	282	26	**312**	13	330	8	**350**	17	2	18	**37**	19	5	8	**32**	730	1	1	14	12

MD Peak Period

Hours

	Glanford Ave				Glanford Ave				Baker St				Baker St				Total	Crosswalks			
	NORTH Approach				SOUTH Approach				WEST Approach				EAST Approach				Volume				
Totals	Left	Thru	Right	Total	Left	Thru	Right	Total	Left	Thru	Right	Total	Left	Thru	Right	Total		N	S	W	E
Total																					
Avg Hr																					

PM Peak Period

3 Hours

	Glanford Ave				Glanford Ave				Baker St				Baker St				Total	Crosswalks			
	NORTH Approach				SOUTH Approach				WEST Approach				EAST Approach				Volume				
Totals	Left	Thru	Right	Total	Left	Thru	Right	Total	Left	Thru	Right	Total	Left	Thru	Right	Total		N	S	W	E
Total	21	1047	83	**1151**	68	1028	56	**1152**	25	14	41	**80**	26	4	25	**55**	2438	3	4	27	21
Avg Hr	7	349	28	**384**	23	343	19	**384**	8	5	14	**27**	9	1	8	**18**	813	1	1	9	7

Average Hour Volumes

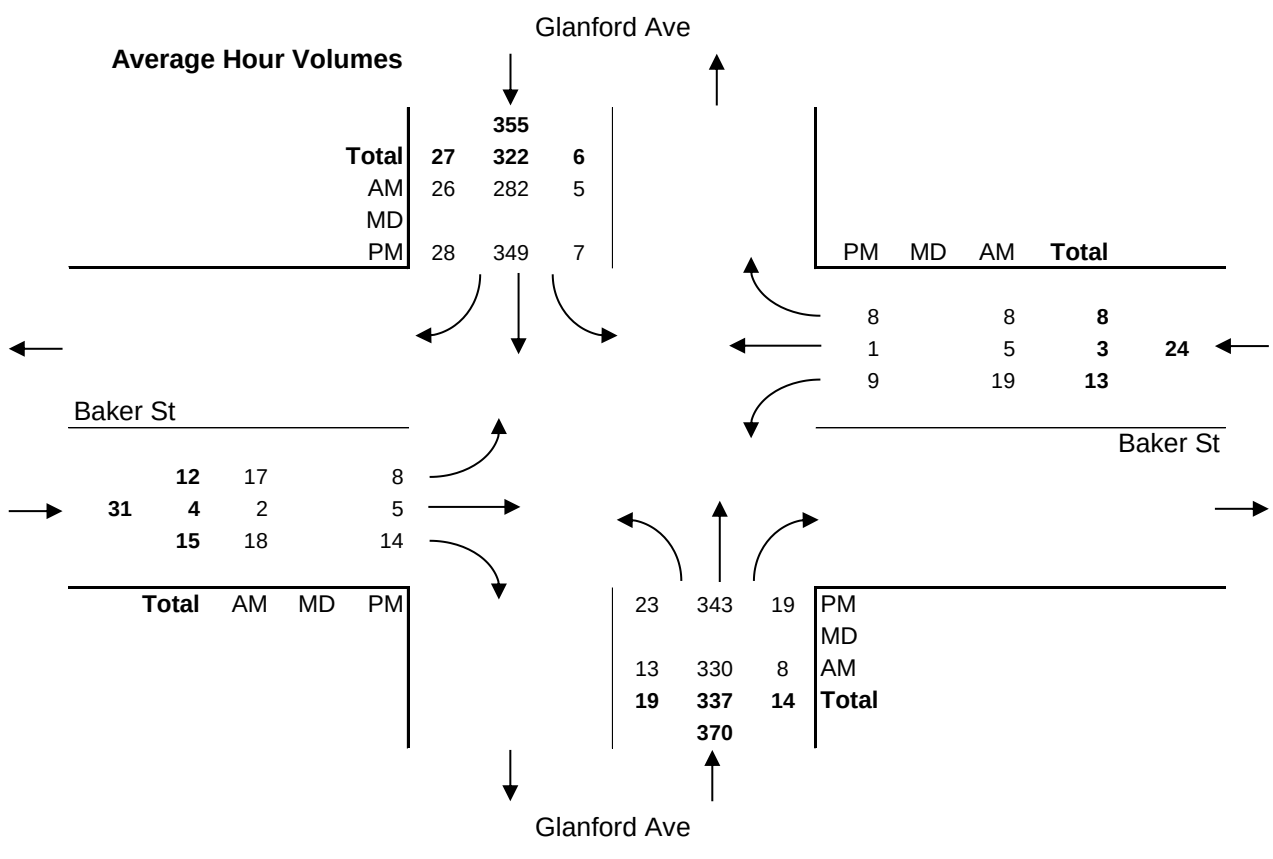

Vehicle Turning Movement Survey
With Classification

Major Route: Glanford Avenue
Minor Route: Baker Street
Municipality: Saanich
Filename: Glanford Ave @ Baker St-Oct 17, 2019.xlsx
Location #: TIN001235
Count ID: 2019034
Date: October 17, 2019
Day-of-week: Thursday

East/West Route: Baker Street
Intersection Type: 4-leg
Signalized?: No
Weather: Rain and wet

Vehicle Classifications: Vehicles and Peds
Bikes

This data is for Bikes

Shift	Start	End	Duration
AM	7:30	9:30	2.00
MD			
PM	15:30	18:30	3.00
Total	**7:30**	**18:30**	**5.00**

Notes: 24-hour clock used for reporting (15-minute increments)
North Approach - southbound vehicles approaching intersection from the north
15x4 - 15 min volume (from maximum 15 minute period of movement/approach in peak hour period [*]) x 4
Pedestrians - N indicates pedestrians crossing north approach (east/west)

Comments:

Survey Data
Bikes

Glanford Avenue @ Baker Street
Thursday, October 17, 2019

Time Period Begins	Glanford Ave NORTH Approach				Glanford Ave SOUTH Approach				Baker St WEST Approach				Baker St EAST Approach				Total Volume		Peak				
	Left	Thru	Right	Total	Left	Thru	Right	Total	Left	Thru	Right	Total	Left	Thru	Right	Total	15-min	Hour		N	S	W	E
7:30	0	1	0	**1**	0	0	0	**0**	0	0	0	**0**	0	0	0	**0**	**1**		*	0	0	0	0
7:45	0	0	0	**0**	0	1	0	**1**	0	0	0	**0**	0	0	0	**0**	**1**		*	0	0	0	0
8:00	0	0	0	**0**	0	1	0	**1**	0	0	0	**0**	0	0	0	**0**	**1**		*	0	0	0	0
8:15	0	0	0	**0**	0	2	0	**2**	0	0	0	**0**	0	0	0	**0**	**2**	5	+	0	0	0	0
8:30	0	0	0	**0**	0	1	0	**1**	0	0	0	**0**	0	0	0	**0**	**1**	5		0	0	0	0
8:45	0	1	0	**1**	0	0	0	**0**	0	0	0	**0**	0	0	0	**0**	**1**	5		0	0	0	0
9:00	0	1	0	**1**	0	0	0	**0**	0	0	0	**0**	0	0	0	**0**	**1**	5		0	0	0	0
9:15	0	0	0	**0**	0	1	0	**1**	0	0	0	**0**	0	0	0	**0**	**1**	4		0	0	0	0
n/a																							
n/a																							
n/a																							
n/a																							
n/a																							
n/a																							
n/a																							
n/a																							
n/a																							
n/a																							
n/a																							
Total	0	3	0	**3**	0	6	0	**6**	0	0	0	**0**	0	0	0	**0**	**9**			0	0	0	0
n/a																							
n/a																							
n/a																							
n/a																							
n/a																							
n/a																							
n/a																							
n/a																							
n/a																							
n/a																							
n/a																							
n/a																							
n/a																							
n/a																							
n/a																							
n/a																							
n/a																							
n/a																							
n/a																							
n/a																							
n/a																							
Total																							
15:30	0	0	0	**0**	0	0	0	**0**	0	1	0	**1**	0	0	0	**0**	**1**			0	0	0	0
15:45	0	1	0	**1**	0	0	0	**0**	0	0	0	**0**	0	0	0	**0**	**1**			0	0	0	0
16:00	0	0	0	**0**	0	0	0	**0**	0	0	0	**0**	0	0	0	**0**	**0**			0	0	0	0
16:15	0	1	0	**1**	0	0	0	**0**	0	0	0	**0**	0	0	0	**0**	**1**	3	*	0	0	0	0
16:30	0	0	0	**0**	0	1	0	**1**	0	0	0	**0**	0	0	0	**0**	**1**	3	*	0	0	0	0
16:45	0	2	0	**2**	0	0	0	**0**	0	0	0	**0**	0	0	0	**0**	**2**	4	*	0	0	0	0
17:00	0	1	0	**1**	0	2	0	**2**	0	0	0	**0**	0	0	0	**0**	**3**	7	+	0	0	0	0
17:15	0	0	0	**0**	0	0	0	**0**	0	0	0	**0**	0	0	0	**0**	**0**	6		0	0	0	0
17:30	0	1	0	**1**	0	0	0	**0**	0	0	0	**0**	0	0	0	**0**	**1**	6		0	0	0	0
17:45	0	0	0	**0**	0	0	0	**0**	0	0	0	**0**	0	0	0	**0**	**0**	4		0	0	0	0
18:00	0	0	1	**1**	0	0	0	**0**	0	0	0	**0**	0	0	0	**0**	**1**	2		0	0	0	0
18:15	0	0	0	**0**	0	0	0	**0**	0	0	0	**0**	0	0	0	**0**	**0**	2		0	0	0	0
n/a																							
n/a																							
n/a																							
n/a																							
n/a																							
n/a																							
n/a																							
n/a																							
Total	0	6	1	**7**	0	3	0	**3**	0	1	0	**1**	0	0	0	**0**	**11**			0	0	0	0

AM Peak Period
Bikes

Glanford Avenue @ Baker Street
Thursday, October 17, 2019

Time Period Begins	Glanford Ave NORTH Approach				Glanford Ave SOUTH Approach				Baker St WEST Approach				Baker St EAST Approach				Total Volume		Peak					Conflict	
	Left	Thru	Right	Total	Left	Thru	Right	Total	Left	Thru	Right	Total	Left	Thru	Right	Total	15-min	Hour		N	S	W	E	15 min	Hr
7:30	0	1	0	1	0	0	0	0	0	0	0	0	0	0	0	0	1		*	0	0	0	0	1	
7:45	0	0	0	0	0	1	0	1	0	0	0	0	0	0	0	0	1		*	0	0	0	0	1	
8:00	0	0	0	0	0	1	0	1	0	0	0	0	0	0	0	0	1		*	0	0	0	0	1	
8:15	0	0	0	0	0	2	0	2	0	0	0	0	0	0	0	0	2	5	+	0	0	0	0	2	5
8:30	0	0	0	0	0	1	0	1	0	0	0	0	0	0	0	0	1	5		0	0	0	0	1	5
8:45	0	1	0	1	0	0	0	0	0	0	0	0	0	0	0	0	1	5		0	0	0	0	1	5
9:00	0	1	0	1	0	0	0	0	0	0	0	0	0	0	0	0	1	5		0	0	0	0	1	5
9:15	0	0	0	0	0	1	0	1	0	0	0	0	0	0	0	0	1	4		0	0	0	0	1	4
n/a																									
n/a																									
n/a																									
n/a																									
n/a																									
n/a																									
n/a																									
n/a																									
n/a																									
n/a																									
n/a																									
n/a																									
Total	0	3	0	**3**	0	6	0	**6**	0	0	0	**0**	0	0	0	**0**	9			0	0	0	0		6
Avg Hr	0	2	0	**2**	0	3	0	**3**	0	0	0	**0**	0	0	0	**0**	5			0	0	0	0		

Peak hour of the intersection

Pk Hr	0	1	0	1	0	4	0	4	0	0	0	0	0	0	0	0	5	*		0	0	0	0		4
15x4	0	4	0	4	0	8	0	8	0	0	0	0	0	0	0	0	8	+		0	0	0	0		8
PHF	n/a	0.25	n/a	**0.25**	n/a	0.50	n/a	**0.50**	n/a	n/a	n/a	**n/a**	n/a	n/a	n/a	**n/a**	0.63			n/a	n/a	n/a	n/a		0.50

Peak hour of conflicting volumes for the intersection

Pk Hr	0	1	0	1	0	4	0	4	0	0	0	0	0	0	0	0	5	*		0	0	0	0		4
15x4	0	4	0	4	0	8	0	8	0	0	0	0	0	0	0	0	8	+		0	0	0	0		8
PHF	n/a	0.25	n/a	**0.25**	n/a	0.50	n/a	**0.50**	n/a	n/a	n/a	**n/a**	n/a	n/a	n/a	**n/a**	0.63			n/a	n/a	n/a	n/a		0.50

** Calculated peak hour occurs during the first or last hour of shift and therefore may be invalid. **

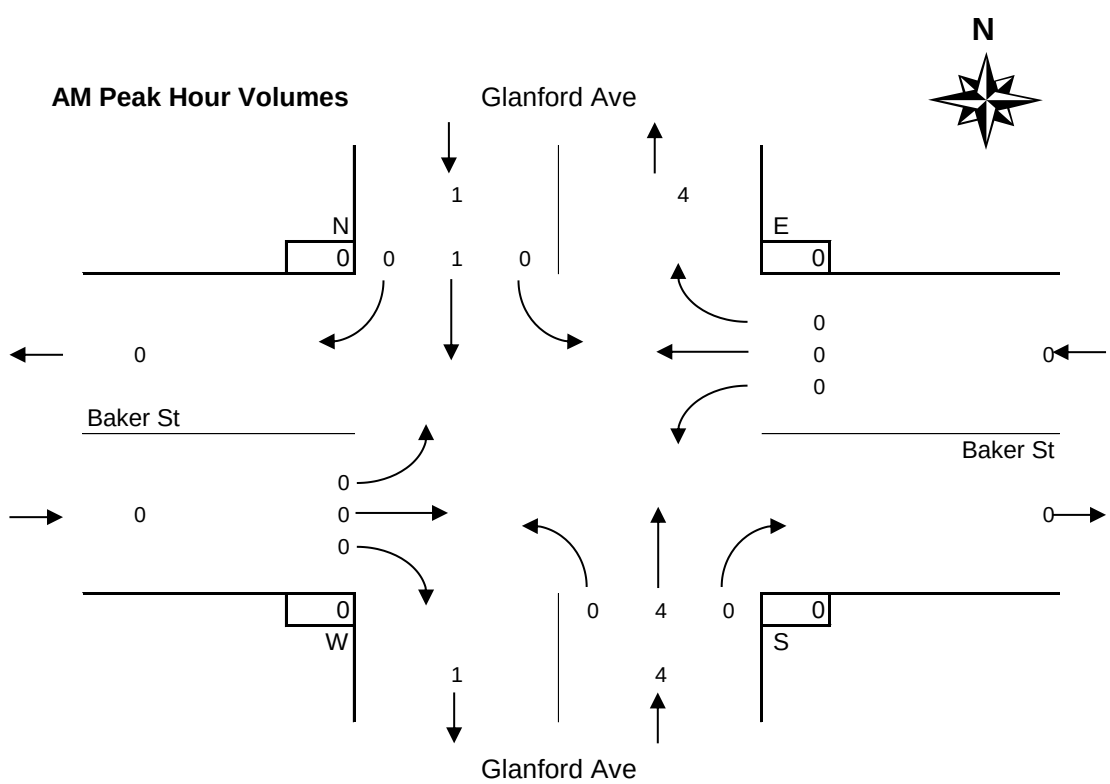

MD Peak Period
Bikes

Glanford Avenue @ Baker Street
Thursday, October 17, 2019

Time Period Begins	Glanford Ave NORTH Approach				Glanford Ave SOUTH Approach				Baker St WEST Approach				Baker St EAST Approach				Total Volume		Peak					Conflict	
	Left	Thru	Right	Total	Left	Thru	Right	Total	Left	Thru	Right	Total	Left	Thru	Right	Total	15-min	Hour		N	S	W	E	15 min	Hr
n/a																									
n/a																									
n/a																									
n/a																									
n/a																									
n/a																									
n/a																									
n/a																									
n/a																									
n/a																									
n/a																									
n/a																									
n/a																									
n/a																									
n/a																									
n/a																									
Total																									
Avg Hr																									

Peak hour of the intersection

Pk Hr																		*							
15x4																		+							
PHF																									

Peak hour of conflicting volumes for the intersection

Pk Hr																		*							
15x4																		+							
PHF																									

MD Peak Hour Volumes

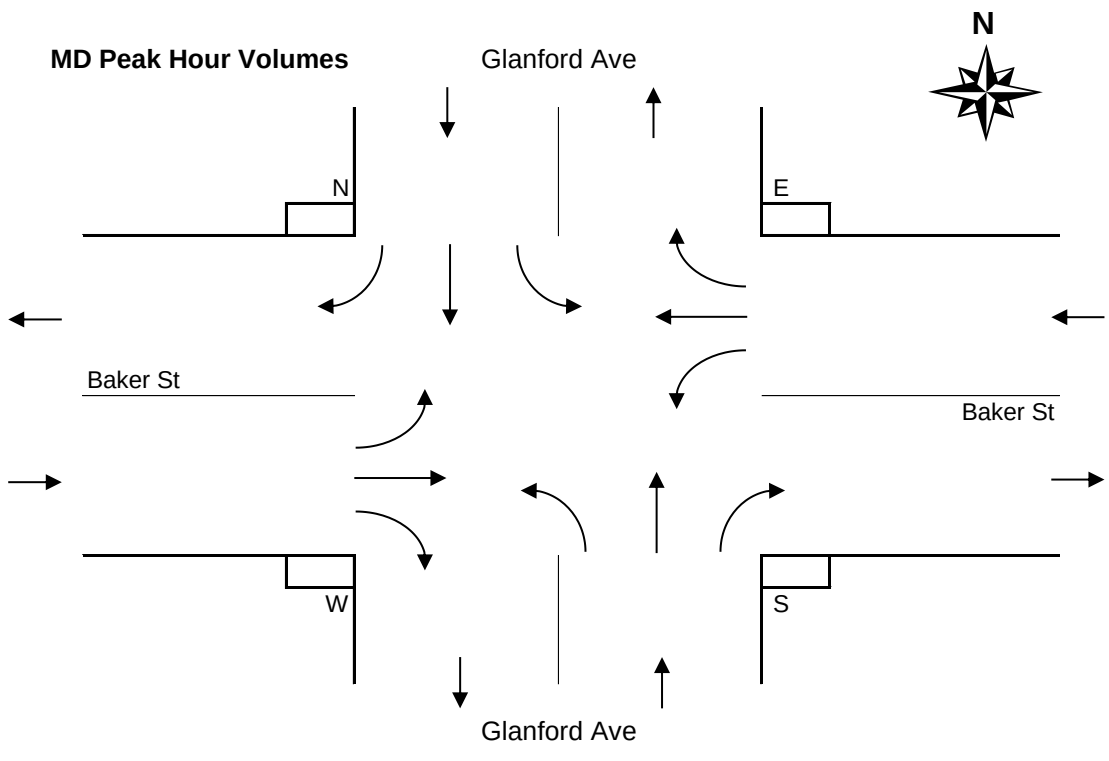

PM Peak Period
Bikes

Glanford Avenue @ Baker Street
Thursday, October 17, 2019

Time Period Begins	Glanford Ave NORTH Approach				Glanford Ave SOUTH Approach				Baker St WEST Approach				Baker St EAST Approach				Total Volume		Peak					Conflict	
	Left	Thru	Right	Total	Left	Thru	Right	Total	Left	Thru	Right	Total	Left	Thru	Right	Total	15-min	Hour		N	S	W	E	15 min	Hr
15:30	0	0	0	0	0	0	0	0	0	1	0	1	0	0	0	0	1			0	0	0	0	1	
15:45	0	1	0	1	0	0	0	0	0	0	0	0	0	0	0	0	1			0	0	0	0	1	
16:00	0	0	0	0	0	0	0	0	0	0	0	0	0	0	0	0	0			0	0	0	0	0	
16:15	0	1	0	1	0	0	0	0	0	0	0	0	0	0	0	0	1	3	*	0	0	0	0	1	3
16:30	0	0	0	0	0	1	0	1	0	0	0	0	0	0	0	0	1	3	*	0	0	0	0	1	3
16:45	0	2	0	2	0	0	0	0	0	0	0	0	0	0	0	0	2	4	*	0	0	0	0	2	4
17:00	0	1	0	1	0	2	0	2	0	0	0	0	0	0	0	0	3	7	+	0	0	0	0	2	6
17:15	0	0	0	0	0	0	0	0	0	0	0	0	0	0	0	0	0	6		0	0	0	0	0	5
17:30	0	1	0	1	0	0	0	0	0	0	0	0	0	0	0	0	1	6		0	0	0	0	1	5
17:45	0	0	0	0	0	0	0	0	0	0	0	0	0	0	0	0	0	4		0	0	0	0	0	3
18:00	0	0	1	1	0	0	0	0	0	0	0	0	0	0	0	0	1	2		0	0	0	0	1	2
18:15	0	0	0	0	0	0	0	0	0	0	0	0	0	0	0	0	0	2		0	0	0	0	0	2
n/a																									
n/a																									
n/a																									
n/a																									
n/a																									
n/a																									
n/a																									
n/a																									
Total	0	6	1	**7**	0	3	0	**3**	0	1	0	**1**	0	0	0	**0**	11			0	0	0	0		8
Avg Hr	0	2	0	**2**	0	1	0	**1**	0	0	0	**0**	0	0	0	**0**	4			0	0	0	0		

Peak hour of the intersection

Pk Hr	0	4	0	4	0	3	0	3	0	0	0	0	0	0	0	0	7	*		0	0	0	0		4
15x4	0	8	0	8	0	8	0	8	0	0	0	0	0	0	0	0	12	+		0	0	0	0		8
PHF	n/a	0.50	n/a	**0.50**	n/a	0.38	n/a	**0.38**	n/a	n/a	n/a	**n/a**	n/a	n/a	n/a	**n/a**	0.58			n/a	n/a	n/a	n/a		0.50

Peak hour of conflicting volumes for the intersection

Pk Hr	0	4	0	4	0	3	0	3	0	0	0	0	0	0	0	0	7	*		0	0	0	0		4
15x4	0	8	0	8	0	8	0	8	0	0	0	0	0	0	0	0	12	+		0	0	0	0		8
PHF	n/a	0.50	n/a	**0.50**	n/a	0.38	n/a	**0.38**	n/a	n/a	n/a	**n/a**	n/a	n/a	n/a	**n/a**	0.58			n/a	n/a	n/a	n/a		0.50

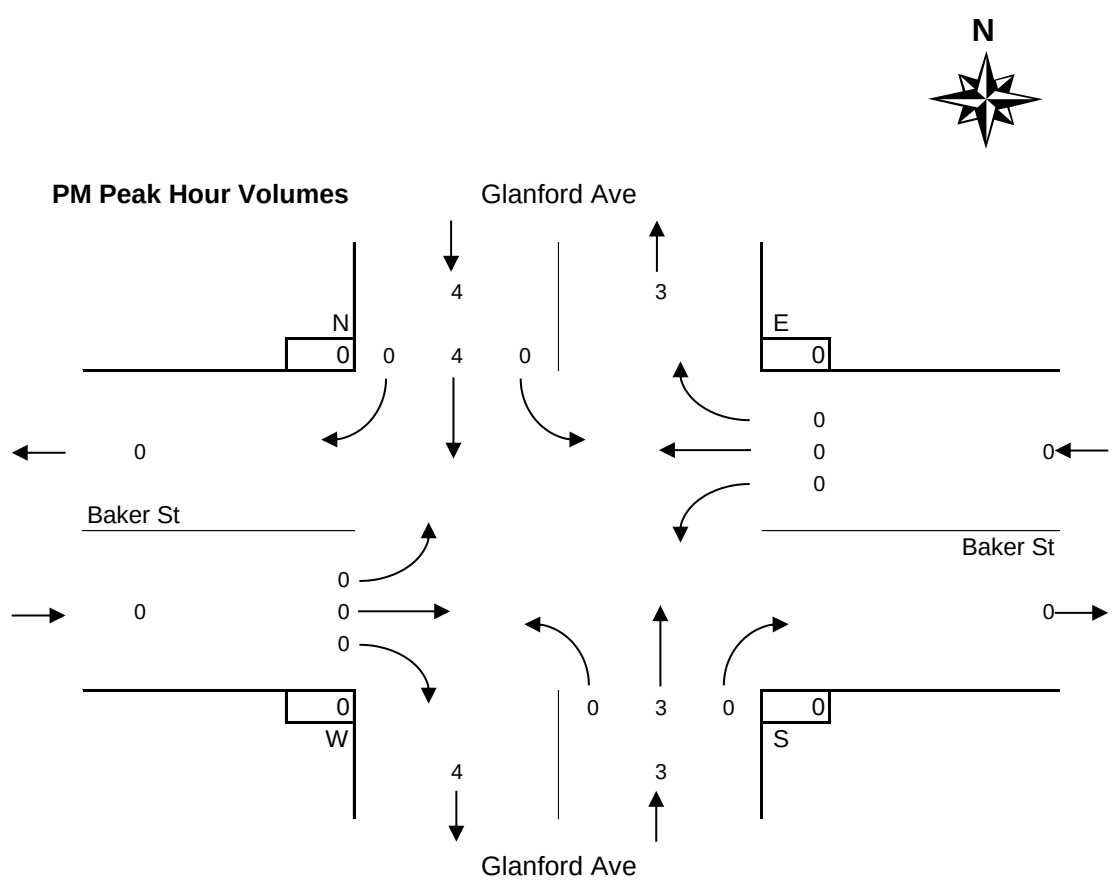

Period Hourly Averages
Bikes

Glanford Avenue @ Baker Street
Thursday, October 17, 2019

Entire Survey Period
5 Hours

	Glanford Ave				Glanford Ave				Baker St				Baker St								
	NORTH Approach				SOUTH Approach				WEST Approach				EAST Approach				Total				
	Left	Thru	Right	Total	Left	Thru	Right	Total	Left	Thru	Right	Total	Left	Thru	Right	Total	Volume	N	S	W	E
Total	0	9	1	**10**	0	9	0	**9**	0	1	0	**1**	0	0	0	**0**	20	0	0	0	0
Avg Hr	0	2	0	**2**	0	2	0	**2**	0	0	0	**0**	0	0	0	**0**	4	0	0	0	0

AM Peak Period
2 Hours

	Glanford Ave				Glanford Ave				Baker St				Baker St								
	NORTH Approach				SOUTH Approach				WEST Approach				EAST Approach				Total				
Totals	Left	Thru	Right	Total	Left	Thru	Right	Total	Left	Thru	Right	Total	Left	Thru	Right	Total	Volume	N	S	W	E
Period	0	3	0	**3**	0	6	0	**6**	0	0	0	**0**	0	0	0	**0**	9	0	0	0	0
Avg Hr	0	2	0	**2**	0	3	0	**3**	0	0	0	**0**	0	0	0	**0**	5	0	0	0	0

MD Peak Period
Hours

	Glanford Ave				Glanford Ave				Baker St				Baker St								
	NORTH Approach				SOUTH Approach				WEST Approach				EAST Approach				Total				
Totals	Left	Thru	Right	Total	Left	Thru	Right	Total	Left	Thru	Right	Total	Left	Thru	Right	Total	Volume	N	S	W	E
Total																					
Avg Hr																					

PM Peak Period
3 Hours

	Glanford Ave				Glanford Ave				Baker St				Baker St								
	NORTH Approach				SOUTH Approach				WEST Approach				EAST Approach				Total				
Totals	Left	Thru	Right	Total	Left	Thru	Right	Total	Left	Thru	Right	Total	Left	Thru	Right	Total	Volume	N	S	W	E
Total	0	6	1	**7**	0	3	0	**3**	0	1	0	**1**	0	0	0	**0**	11	0	0	0	0
Avg Hr	0	2	0	**2**	0	1	0	**1**	0	0	0	**0**	0	0	0	**0**	4	0	0	0	0
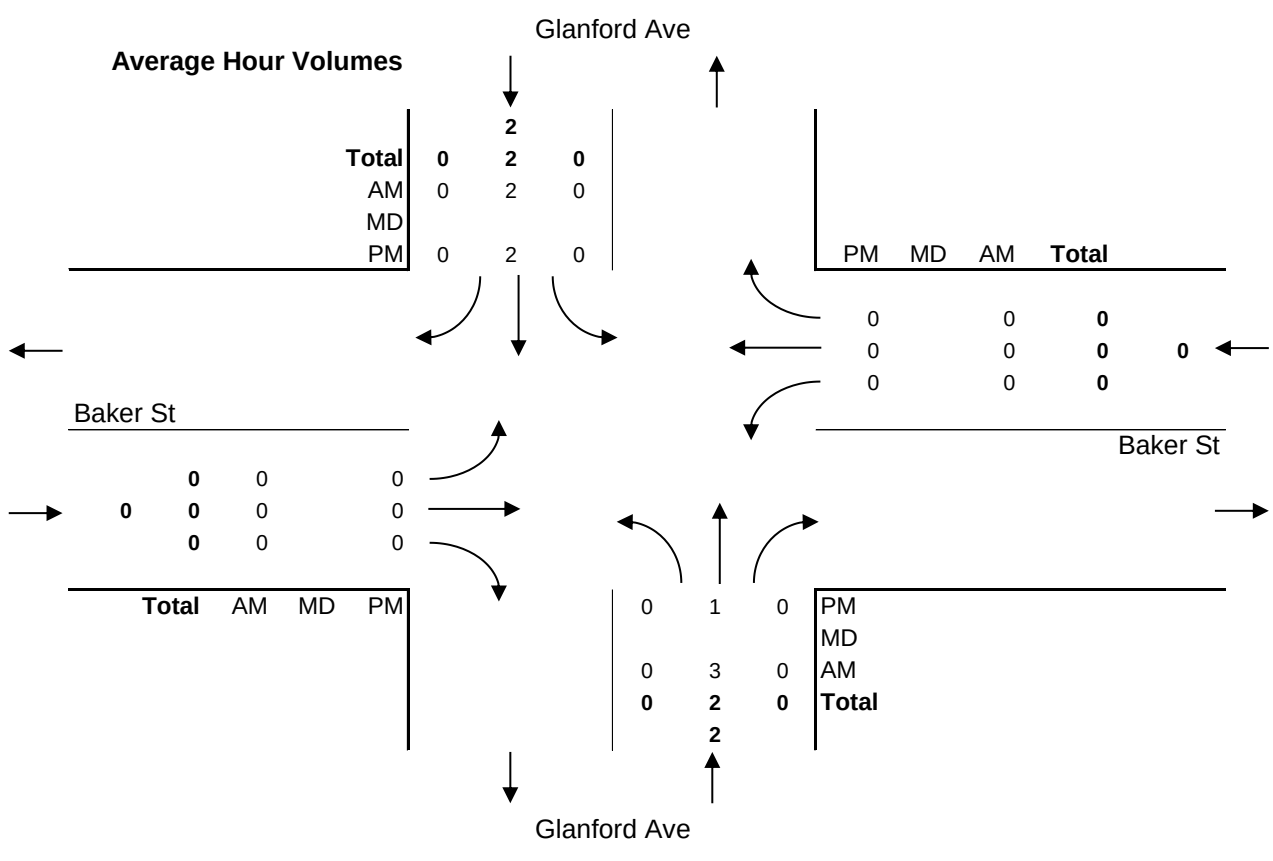
Average Hour Volumes